97-4.4-J5

Wall Mounted Bidet Spray Set
Includes progressive mixer and 49” hose
For use with SS-SHV1.2 concealed rough

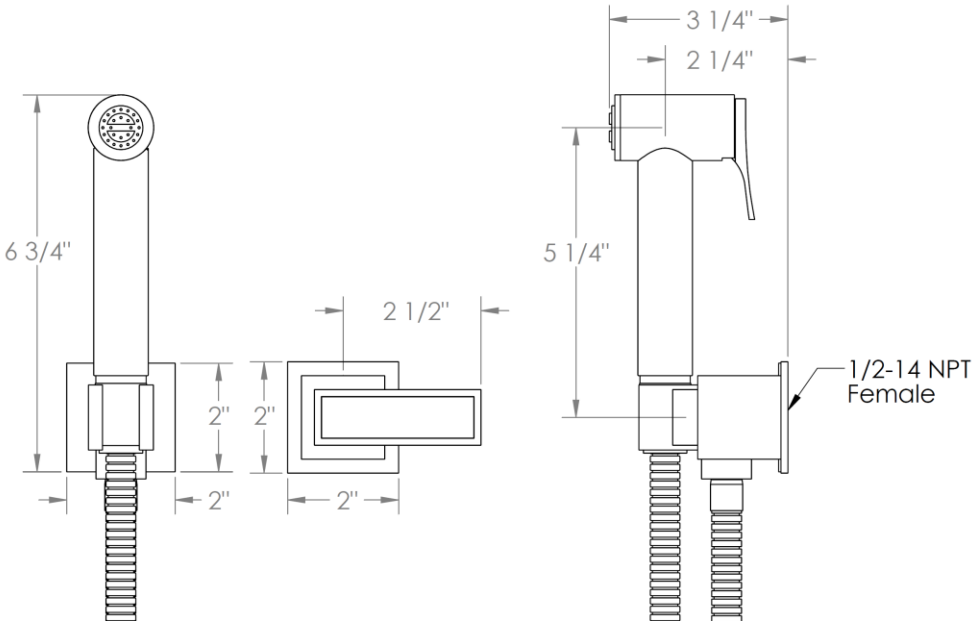

Meets the applicable requirements of ASME A112.18.1-2005/CSA B125.1-05, entitled “Plumbing Supply Fittings”

WATERMARK DESIGNS 8/8/2018

350 Dewitt Ave Brooklyn NY 11207 USA T 718 257 2800 F 718 257 2144 info@watermark-designs.com