AXOR

AXOR Citterio
4-Hole Roman Tub Set Trim with Cross Handles and 1.75 GPM Handshower
Finishes : **chrome** Part no. : **39461001**

Description

Features

- Flow: 5.02 GPM (19 L/Min)
- 90° ceramic valves
- Integrated double backflow prevention

Technology

Product image
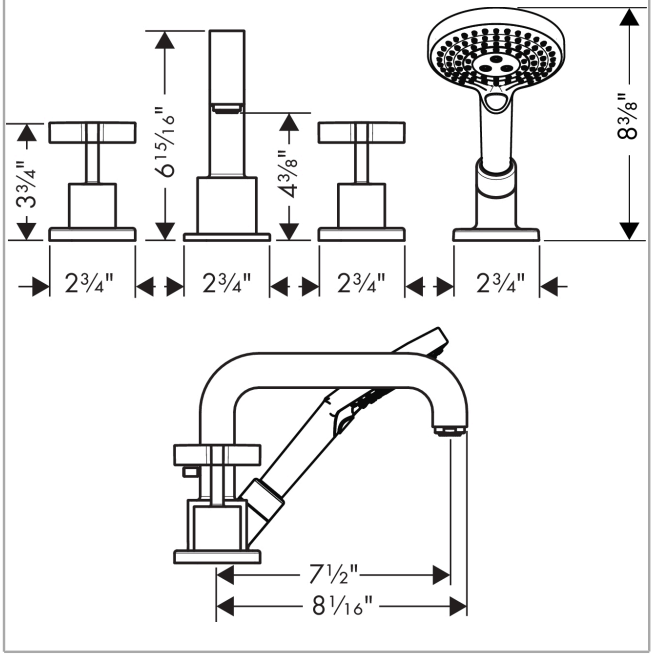
Scale drawing